Moisture Performance Testing of Wood Based Materials in the Field

Linda Meyer, Christian Brischke

Leibniz University Hannover
Faculty of Architecture and Landscape Sciences
Institute of Vocational Sciences in the Building Trade (IBW)

Leibniz Universität Hannover

COST Action FP1303
27 – 28 January 2014
FCBA Paris, France

EUROPEAN COOPERATION IN SCIENCE AND TECHNOLOGY

Outline

- Testing Methodology
  - Gravimetric
  - Relative humidity
  - Resistance
  - Capacitive
- Relevant Aspects
  - Resistance characteristics
  - Local MC *vs*. global MC
- Potential for Durability Classification
  - Results from long-term field studies

Background

- Durability is the result of material resistance and moisture performance

- Fungal degradation requires liquid water

  → Risk of decay when MC is above fibre saturation

- Measure material MC in field tests and structures in service

  → Effect of moisture loads on resulting durability

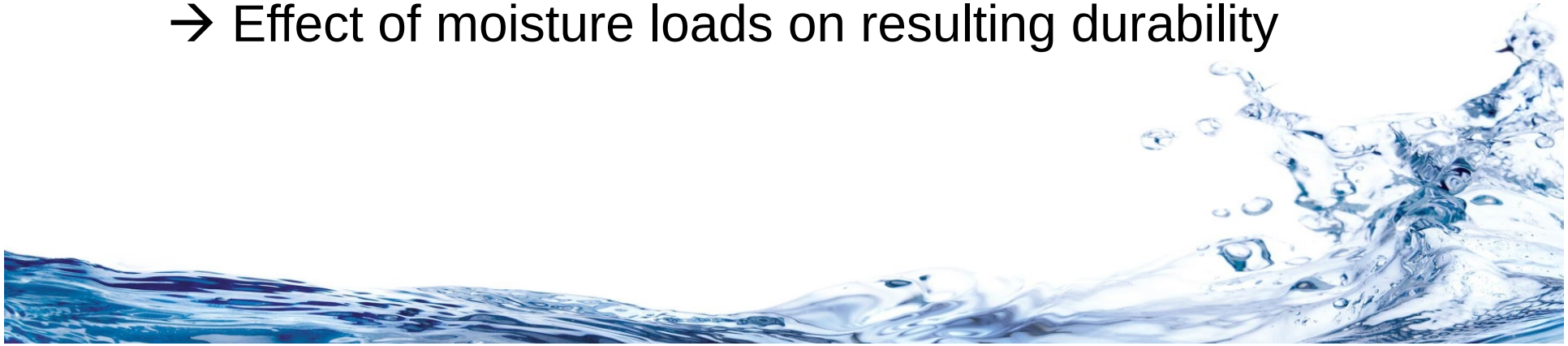

Testing methodology

Capacitive measurements

Electrical resistance

Load cells

Hygroscopic measurements

Gravimetric measurements

Gravimetric measurements

- ⊕ ⊖ Determination of global moisture content ‘only’
- ⊕ No need for additional/ expensive devices
- ⊖ Time consuming
- ⊖ Only ‘small’ specimens
- ⊖ Not continuously

Load cells

- ⊕ ⊖ Determination of global moisture content ‘only’
- ⊕ Continuous recording
- ⊖ Sensitive to wind and rain → inert reference needed
- ⊖ High asset costs

Hygroscopic measurements

- ⊕ ⊖ Determination of local moisture content ‘only’
- ⊕ Continuously
- ⊖ Not above fiber saturation

Capacitive measurements

- ⊕ ⊖ Determination of local moisture content ‘only’
- ⊖ Extremely sensitive to density variations (wood, metal, air)
- ⊖ Not continuously

Importance of Resistance characteristics

Influences on conductivity

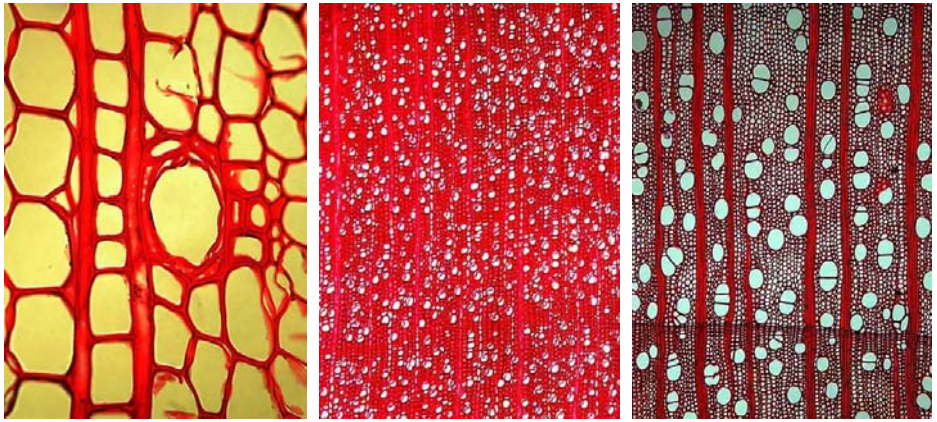

Anatomical structure

Preservatives

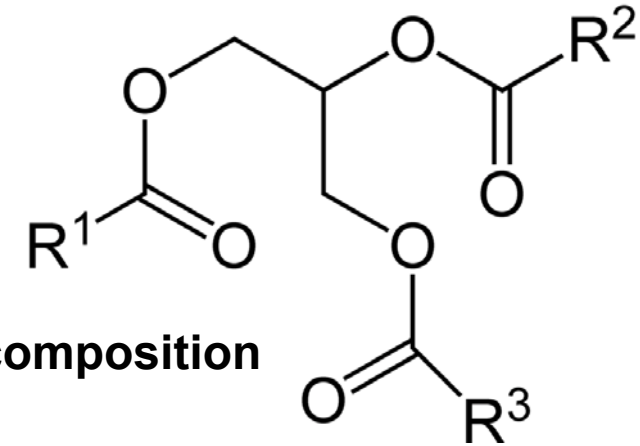

Chemical composition

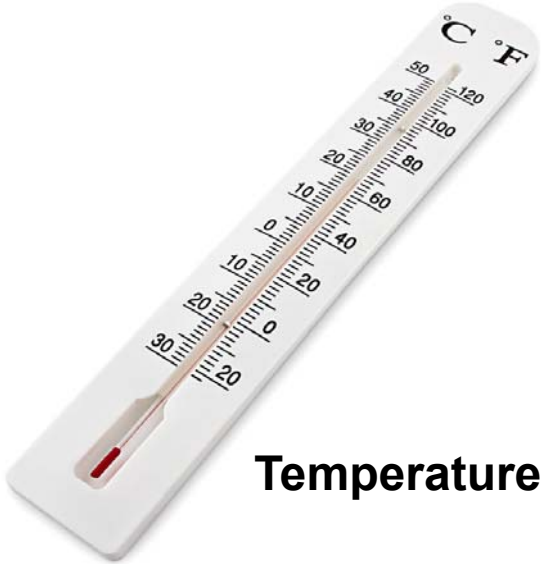

Temperature

Influences on conductivity

→ Resistance characteristics

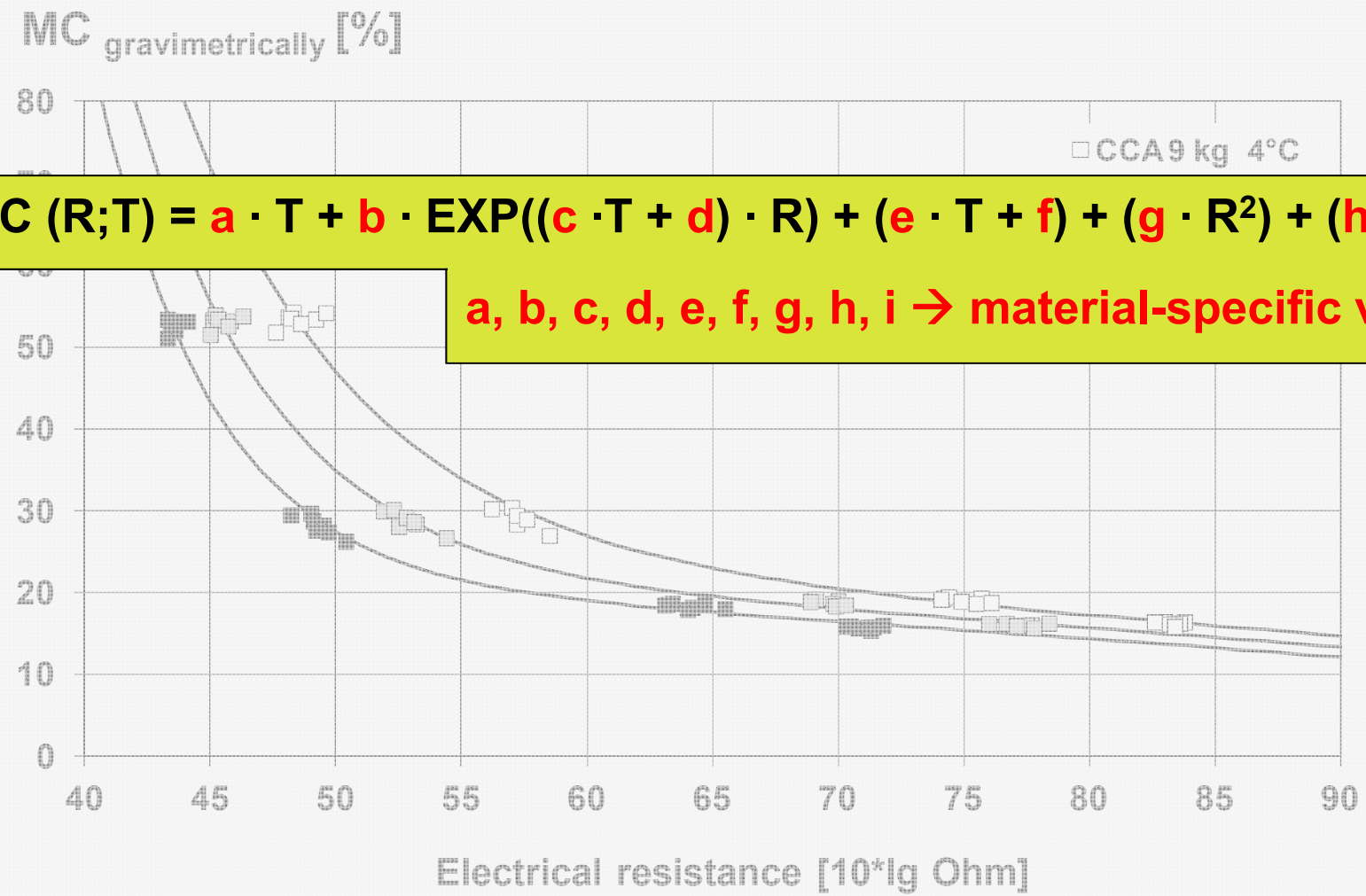

$$MC\ (R;T) = a \cdot T + b \cdot EXP((c \cdot T + d) \cdot R) + (e \cdot T + f) + (g \cdot R^2) + (h \cdot T) + i)$$

a, b, c, d, e, f, g, h, i → material-specific variables

Influences on conductivity

→ Accuracy

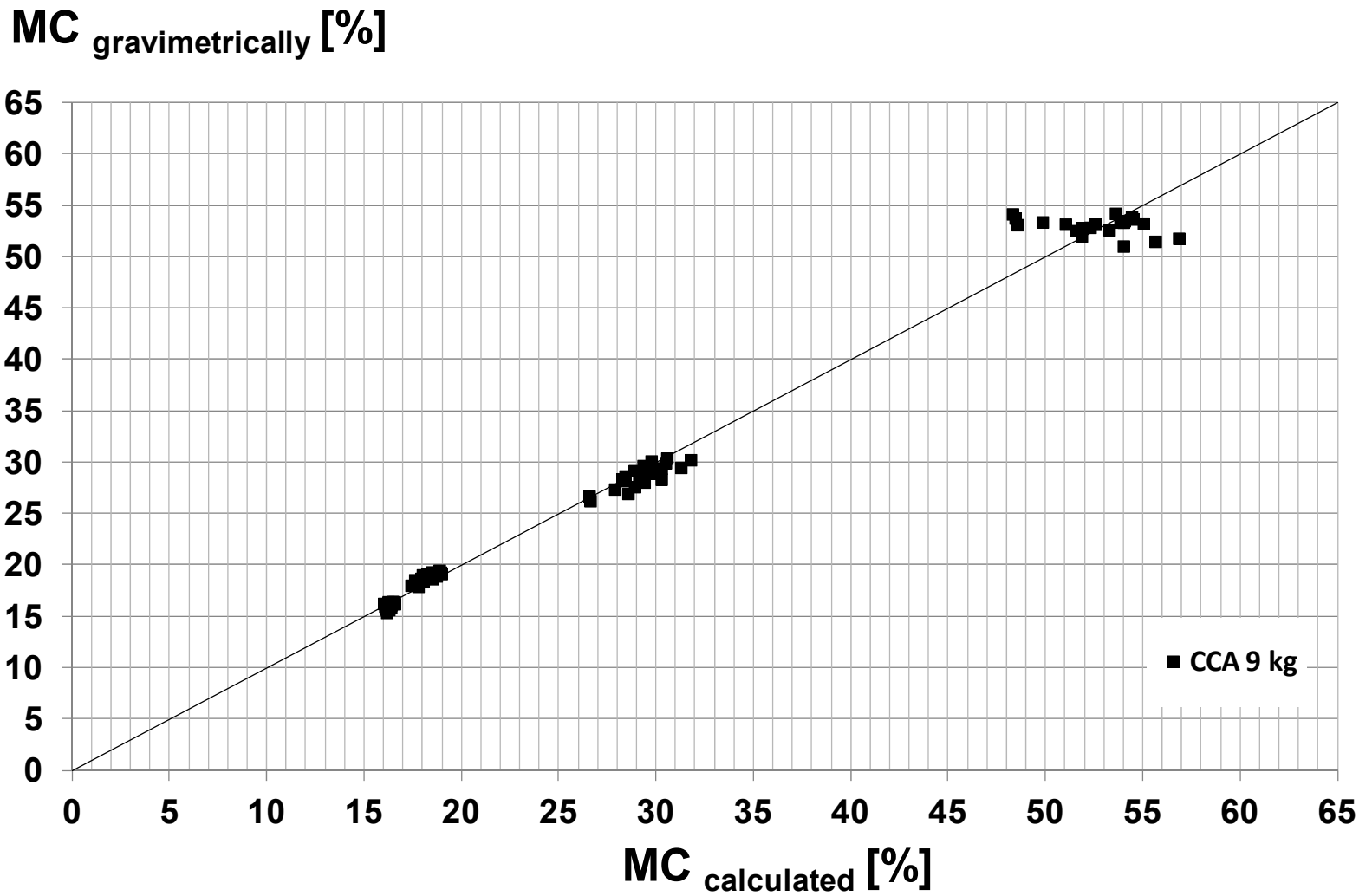

Influences on conductivity

→ Error estimation

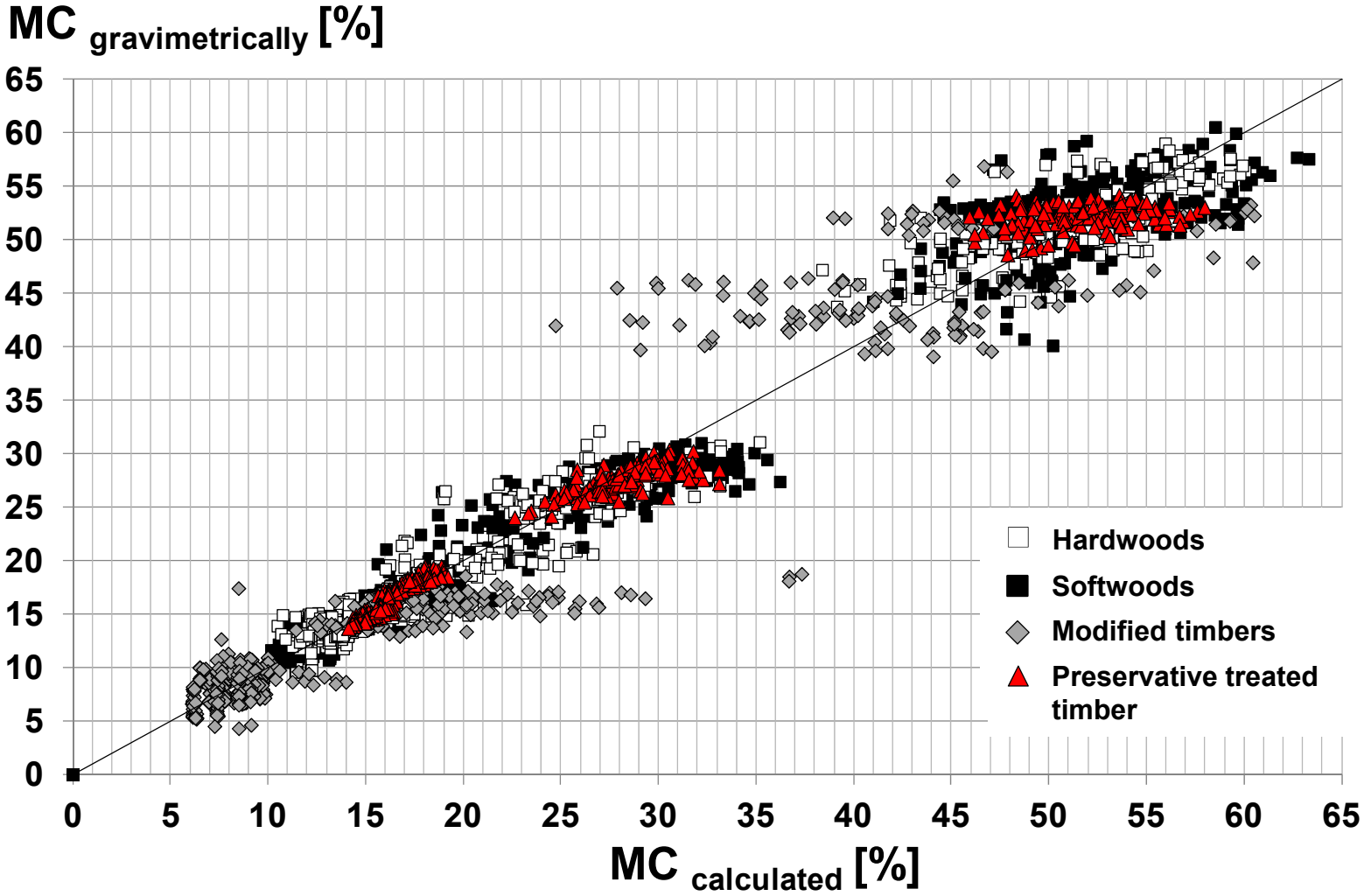

Influences on conductivity

Leibniz Universität Hannover

$MC_{critical}$ SYP $\triangleq$ $MC_{critical}$ Acetylated SYP

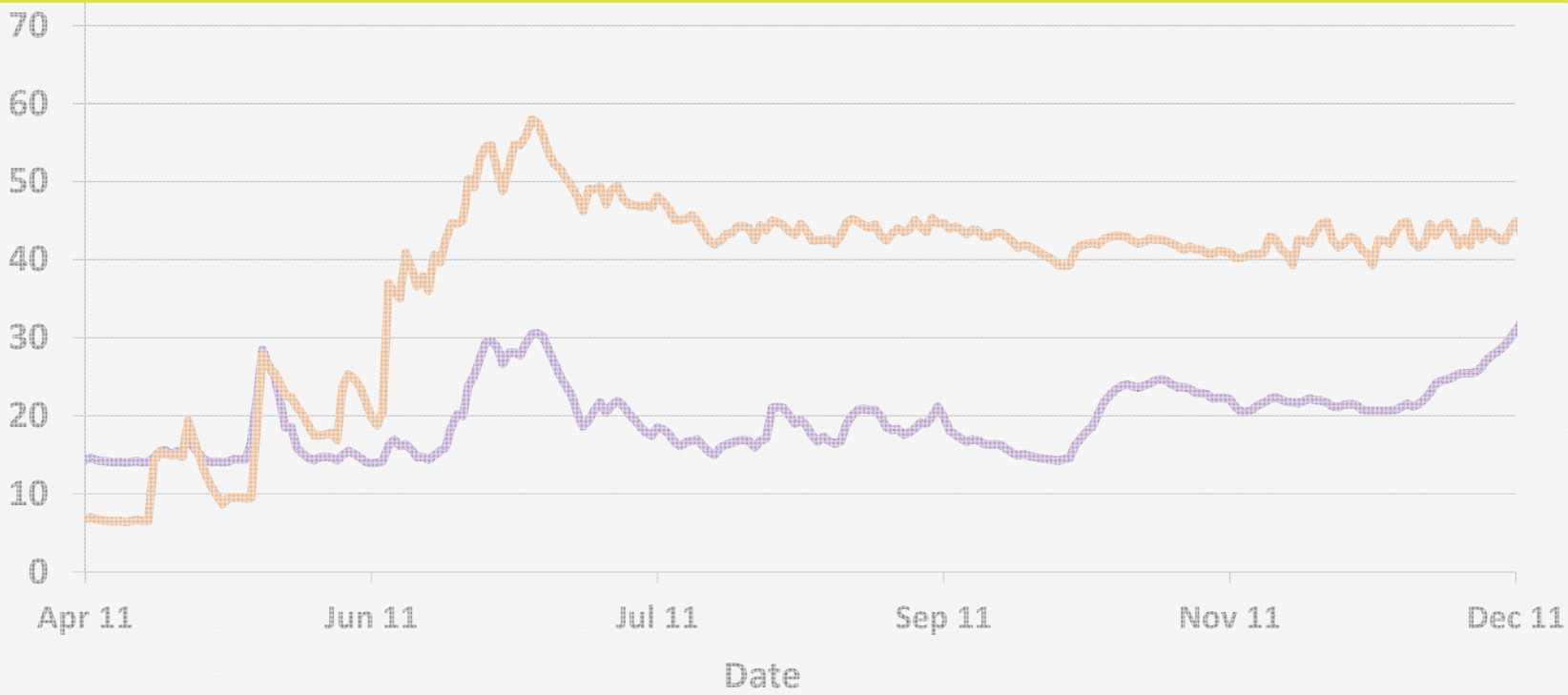

Global *vs*. Local MC

Global *vs*. Local MC

Global MC	Local MC
	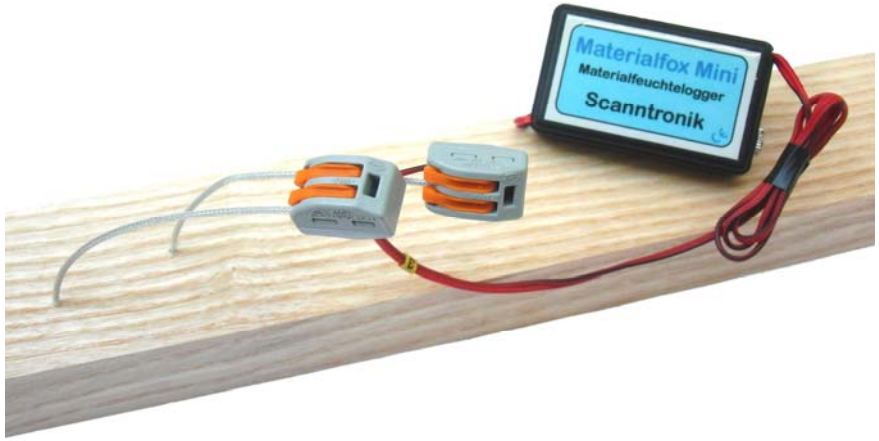
Periodic gravimetric measurements	**Continuous electric recordings**

Global *vs*. Local MC

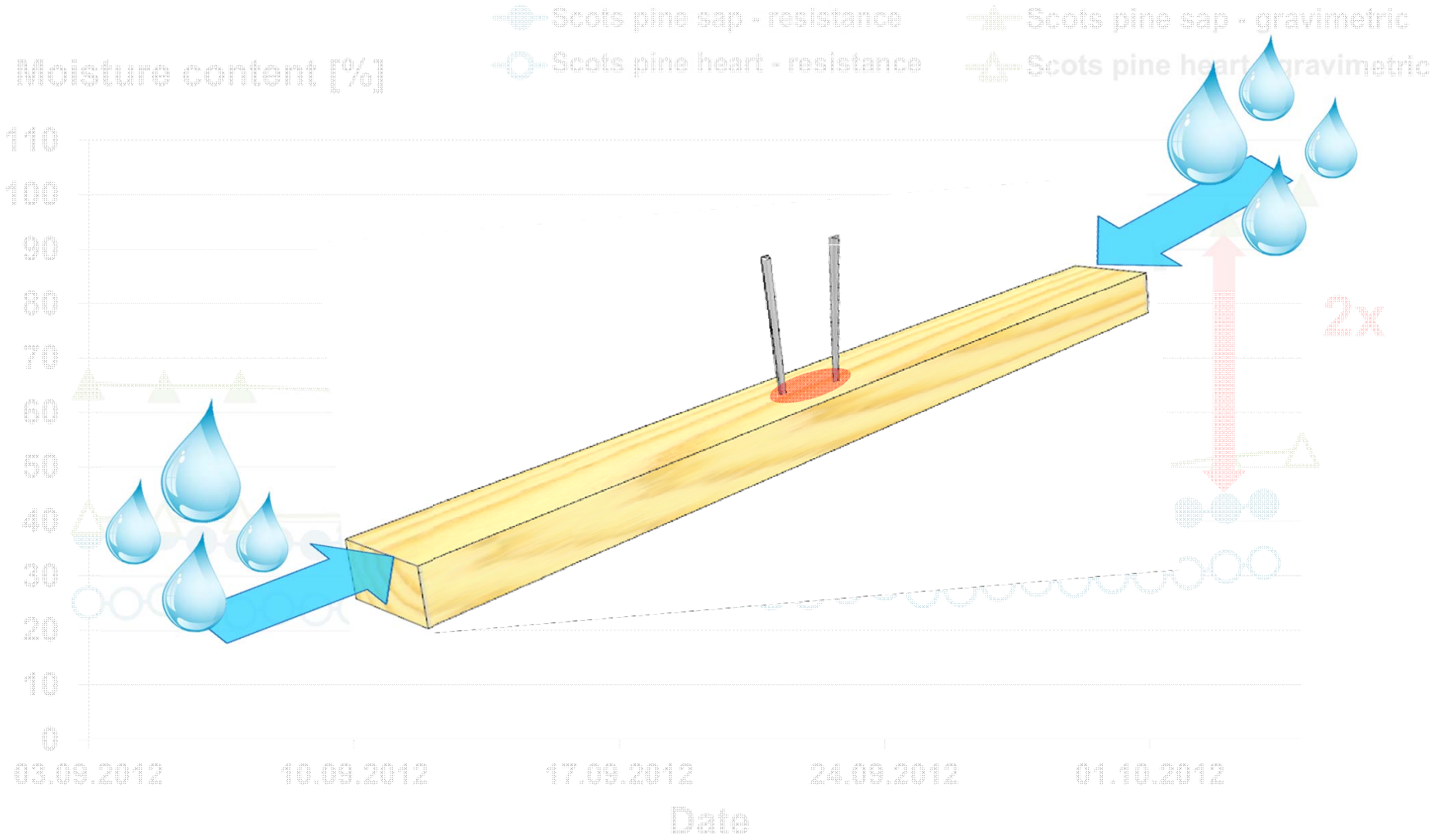

MC → Performance

Leibniz Universität Hannover

How do we get there?

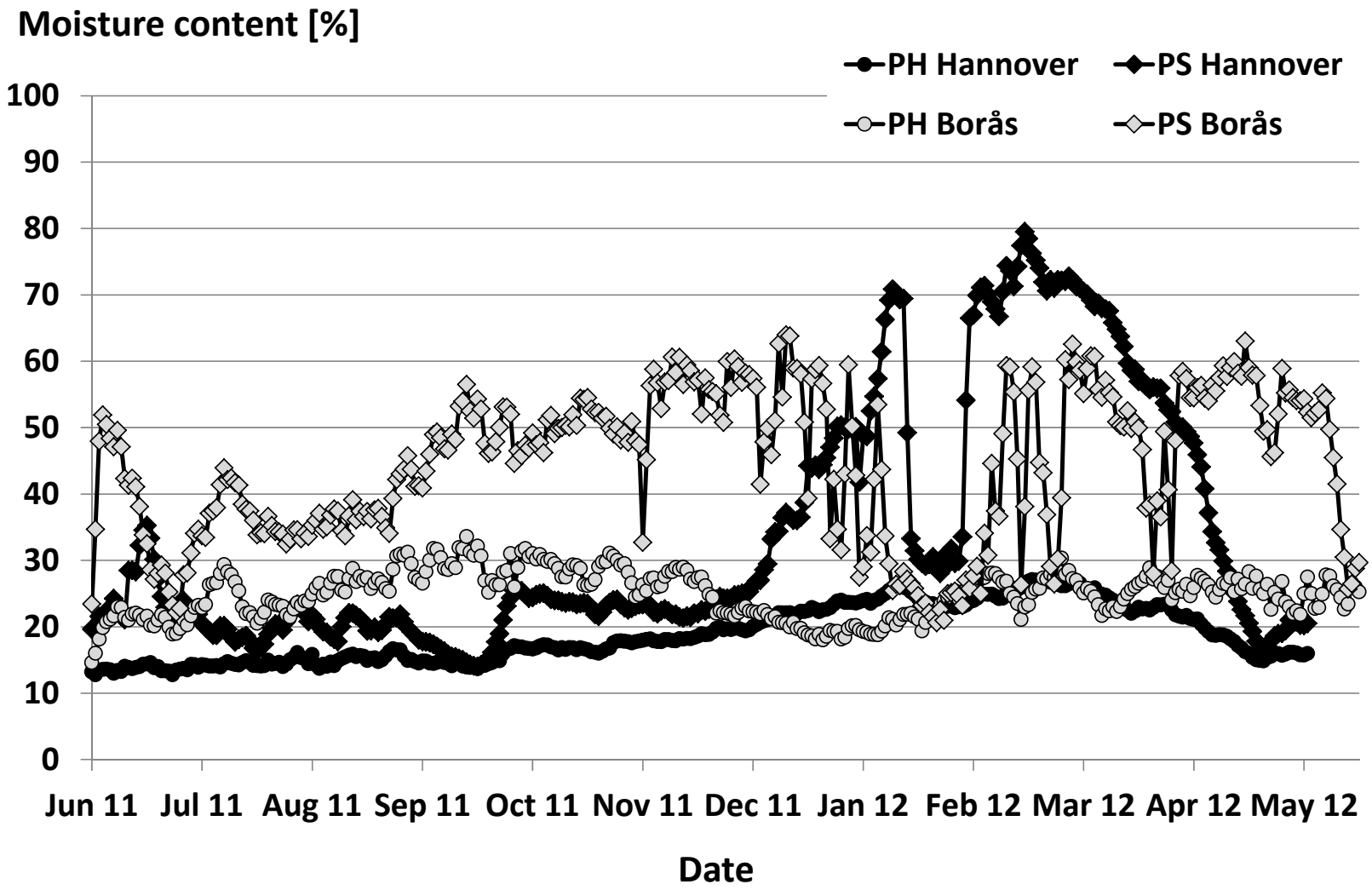

MC → Performance

Leibniz Universität Hannover

- Number of wet days (ToW - concept)

Days > 25 % moisture content

- Dose - response models

Relationship between dose (d) and mean decay rating according to EN 252

$$d = ((a \times d_{\mathrm{T}}) + d_{\mathrm{MC}}) \,/\, (a + 1)$$

Weighting factor

Temperature induced dose component

Moisture induced dose component

MC → Performance

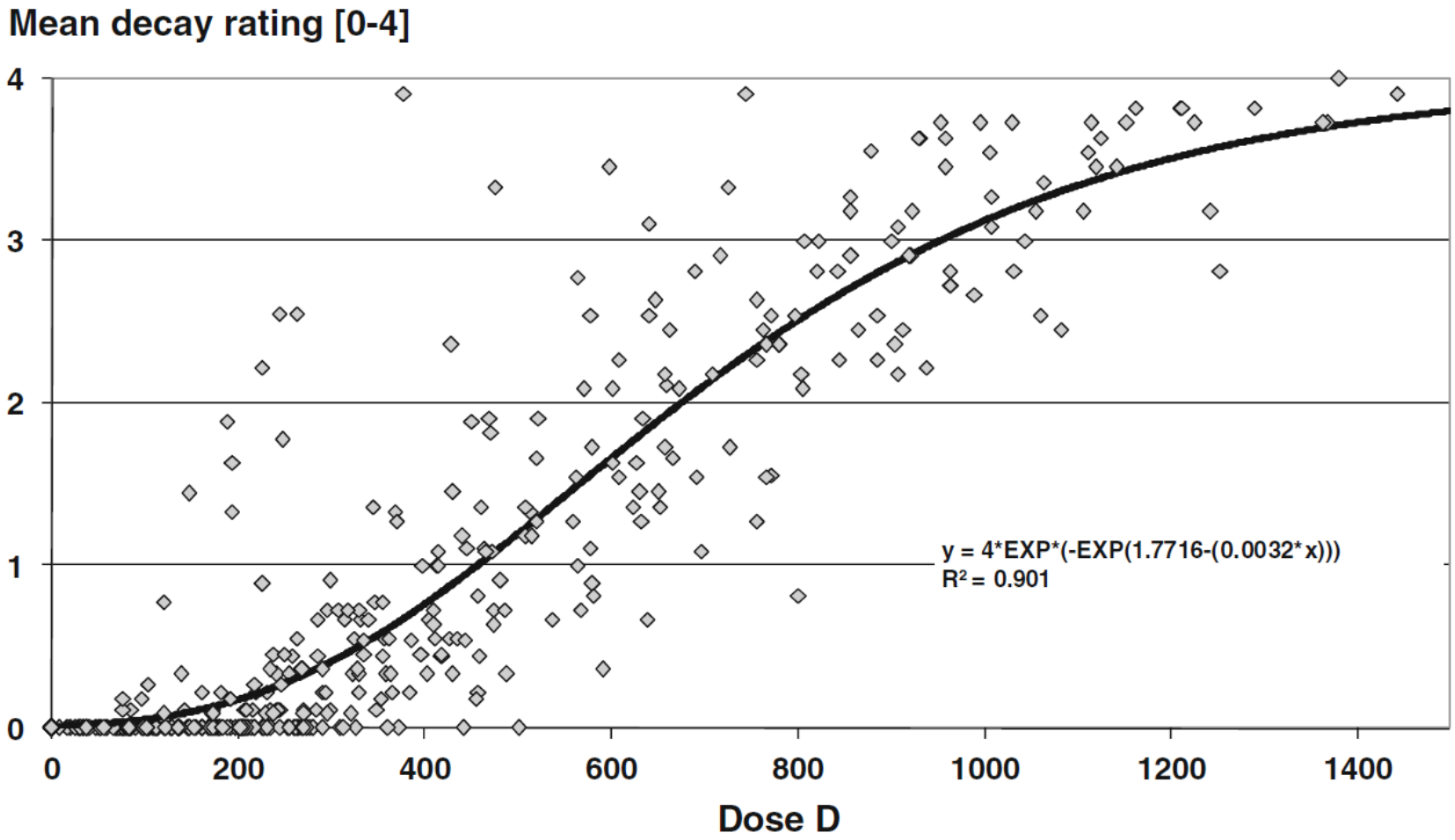

Dose-response performance model, from: Brischke & Rapp 2010

MC → Performance

Leibniz Universität Hannover

Douglas fir heartwood

Test site	Days > 25% MC	$Dose_{T, MC}$
Hamburg shade	382	219
Reulbach shade	456	213
Stuttgart shade	528	267
Freiburg shade	497	244
Bühlertal	258	118
Hinterzarten	405	172
Ljubljana	243	102
Zagreb	160	89
Garston	249	107
Portsmouth	494	187

Total number of days: 1095

MC → Performance

Leibniz Universität Hannover

	Double layer	Lap joint	Sandwich
Wood species			
Black locust			
English oak			
Beech			
European ash			
Norway spruce			
Scots pine heart			
Scots pine sap			

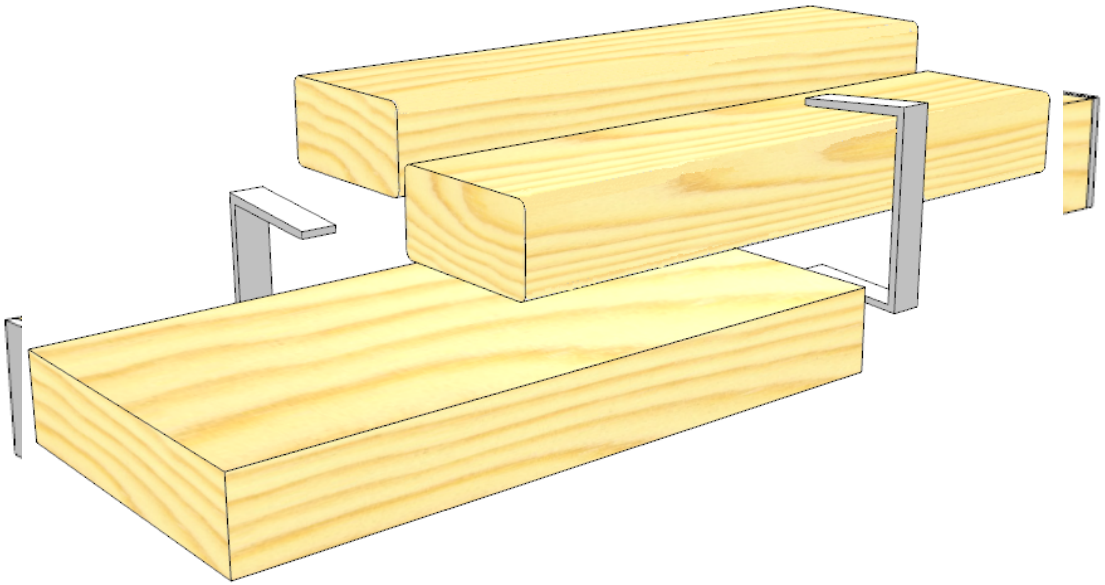

Total number of days: 365

To discuss …?

Leibniz Universität Hannover

! Resistance characteristics needed for every single material under test !

! Alternative/addition to traditional durability testing

! Need for more information about critical MC for modified materials

? Which measurement principle for which purpose ?

? How to deal with differences in global and local moisture content (depending on test method!) ?

? Most appropriate measurement position ?

Moisture Performance Testing of Wood Based Materials in the Field

Linda Meyer, Christian Brischke

Leibniz University Hannover
Faculty of Architecture and Landscape Sciences
Institute of Vocational Sciences in the Building Trade (IBW)

Leibniz Universität Hannover

COST Action FP1303
27 – 28 January 2014
FCBA Paris, France

EUROPEAN COOPERATION IN SCIENCE AND TECHNOLOGY